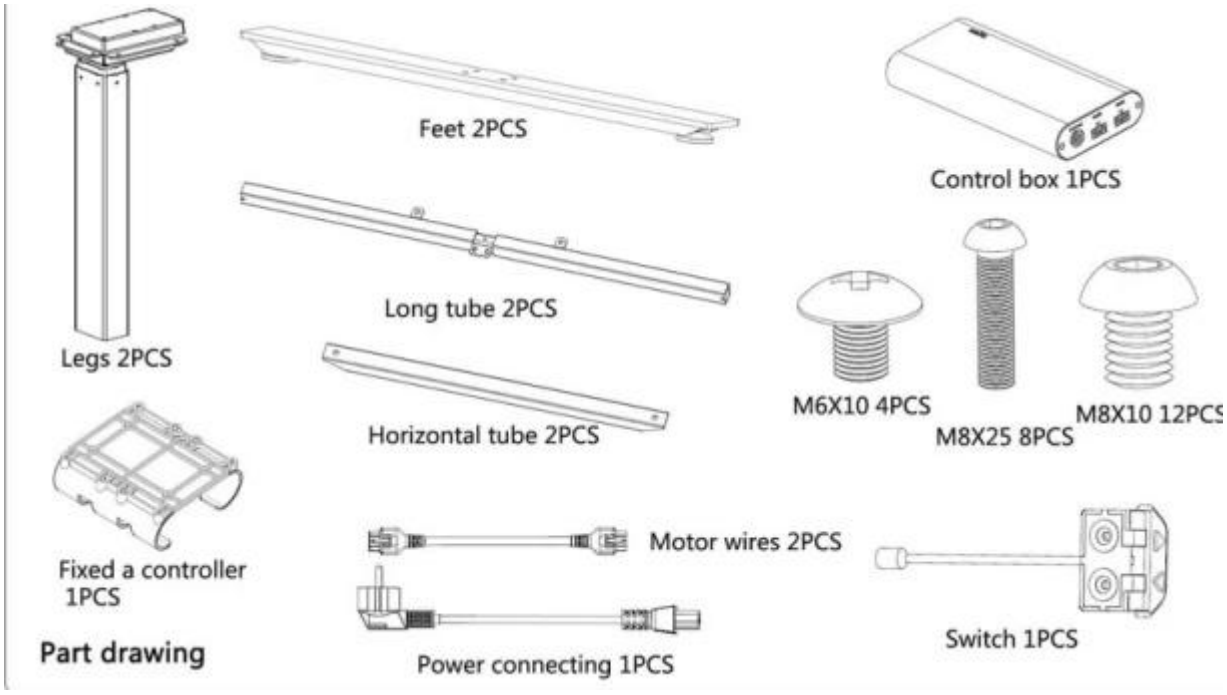

Tuned eight with a socket head screw to the middle hole location as the reference point, need adjust the table frame length is standard, lock screw.

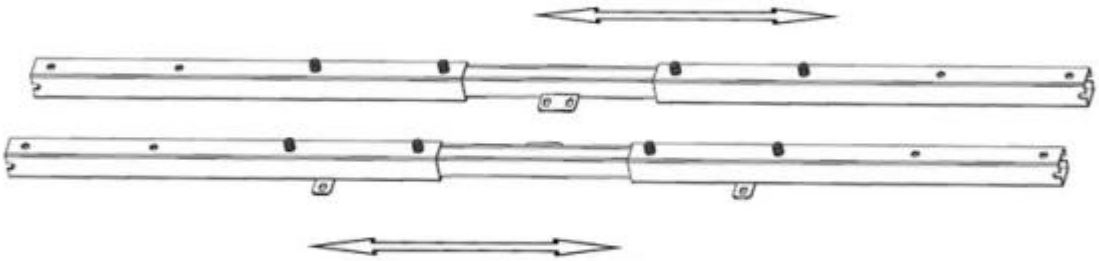

1. According to the demand of the panel adjust the frame length

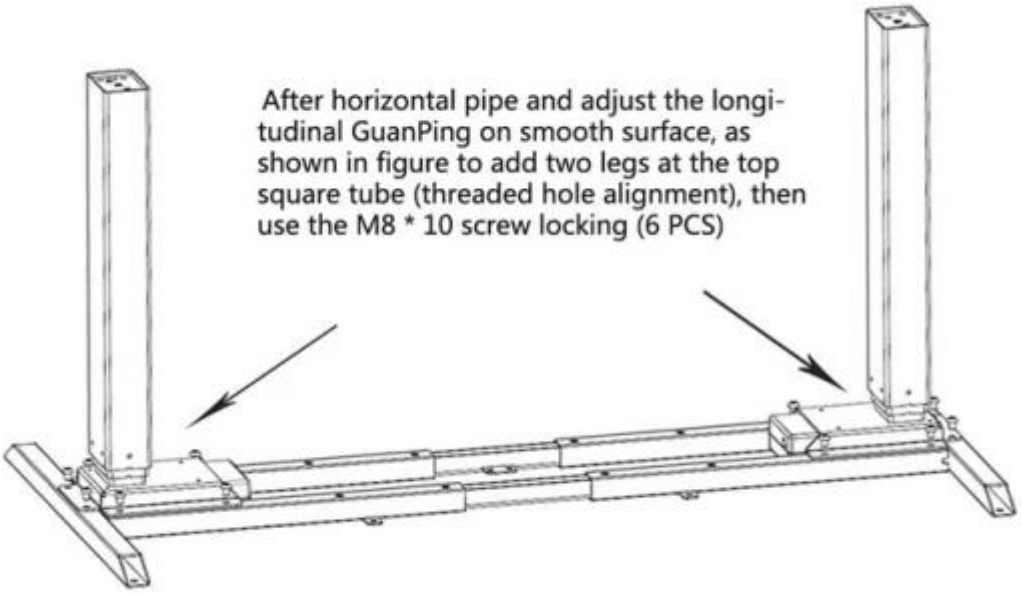

2.Install table legs (2 PCS) and horizontal tube (2 PCS)

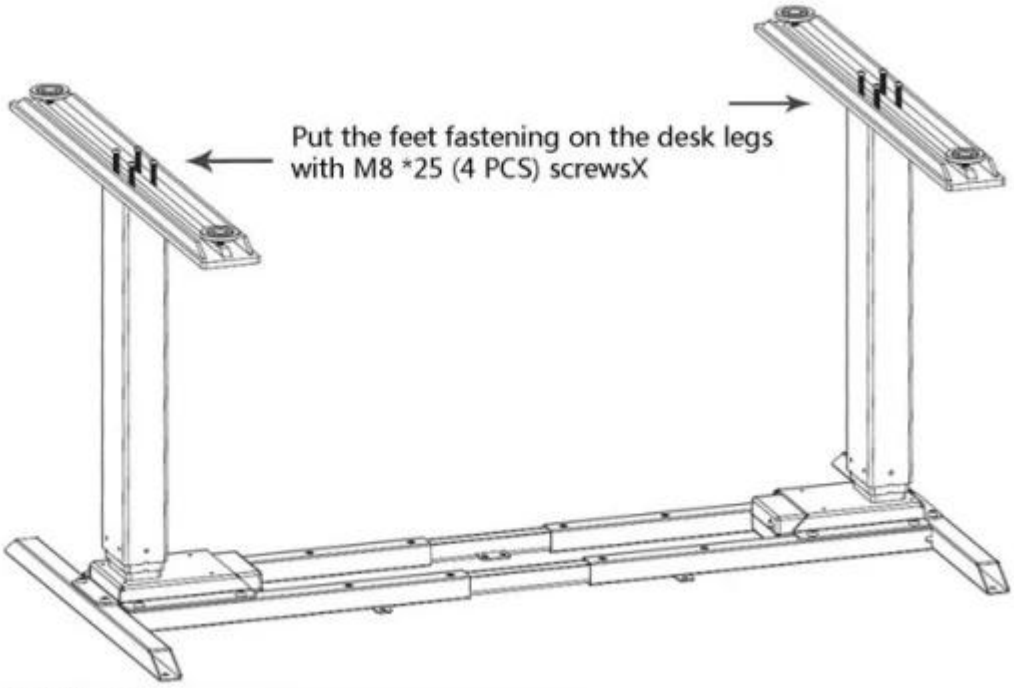

3 : Install desk feet(2pcs).

Ergo Zero Console Instruction

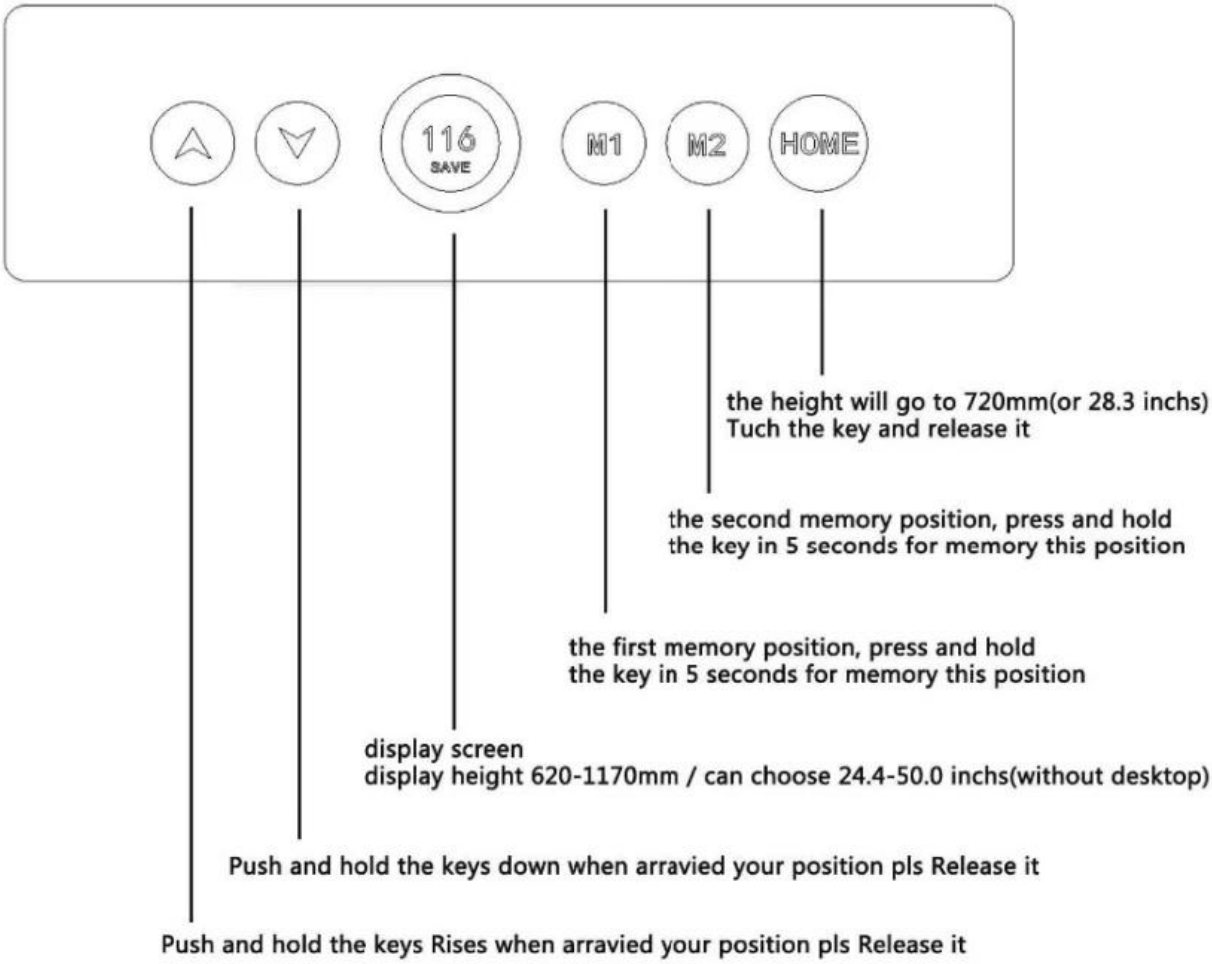

Mode of operation

1. Lightly touch up/down button and hold the key to rise and low the desk height
2. Press HOME button quickly release to certain height 720mm(without desktop) to the normal desk height
3. M1,M2 press and hold the key in 5 seconds, and sounds "Bi" just memory this position.
   Press and quickly release will arrange your memory position.
4. 30S no touch any button, display screen and all light shot down.
5. After display screen shot down into locked, M1/,M2,HOME can' t use anyway, you should touch up or down frist, it can be use when the display screen light.
6. Installation method have 2 types, if you want to amount on the desktop, The size of the hole should cut at your left or right.

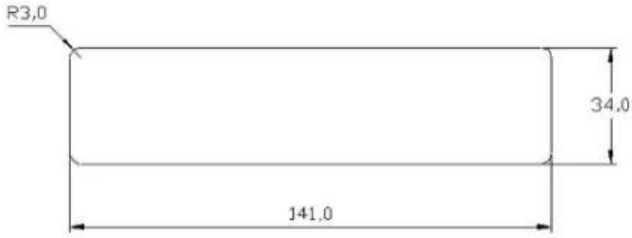

desktop amount type
the hole dimension