Prezzo poco costoso elettrico altezza in piedi da tavolo regolabile Sit stand Scrivanie

A6 series parameter instructions

Electric Control Part :
Input Voltage : AC 110V /220V can use
Output Voltage : DC 24V
Duty Cycle : Max.10%
Switch power supply,low energy consumption
Manual device can move and long press

Desk frame part:
Built-in limit switch
Dynamic load : 120KG
The maximum static load : 140KG
Load speed : 30mm/s
Lift range : 620mm~1270mm
The length of the adjusting range : 1100mm~1600mm

Other part:
Packing Size : 1080*270*325mm 1Set
Gross Weight : 41KG

Safety and warnings

This appliance can be used by children aged from 8 years and above and persons with reduced physical, sensory or mental capabilities or lack of experience and knowledge if they have been given supervision or instruction concerning use of the appliance in a safe way and understand the hazards involved. Children shall not play with the appliance.Cleaning and user maintenance shall not be made by children without supervision.

Correct Disposal of this product

This marking indicates that this product should not be disposed with other household wastes throughout the EU. To prevent possoble harm to the environment or human health from uncontrolled waste disposal, recycle it responsibly to promote the sustainable reuse of material resources. To return your used device,please use the return and collection systems or contact the retailer where the product was purchased. They can take this product for environmental safe recvcling.

Più Sit In piedi Desk Immagini

A6 Series

Perfect the details of the design
Limit switch in the columns and different controlner
Exclusive patent design for details
More convenient to tear open outfit
Capacitive Touch screen memory handset, Apple LCD

A6 Series Dual-motor Three sections

2 legs / 2 motors
Super mute motor synchronization control systerm
Colours can choose Black,White and silver gray
Limit Switch inside
Touch screen memory handset

Lifting range from 620mm-1270mm
Frame adjust from 1100mm-1600mm
Load capacity: 120kg / 265IBS
Full load Speed: 30mm/s

Input Voltage : AC 90V~230V can use
Output Voltage : DC 24V
Duty Cycle : Max.10%
Run into obstacles will stop

Underdesk installing

Desktop installing

Mounting holes on the side ,
easy to fix

Round display screen
display screen
display height 620-1170mm / can choose 24.4-50.0 inchs(without desktop)

- Lightly touch up/down button and hold the key to rise and low the desk height
- Press HOME button quickly release to certain height 720mm(without desktop) to the normal desk height
- M1,M2 press and hold the key in 5 seconds, and sounds "Bi" just memory this position.
  Press and quickly release will arrange your memory position.
- 30S no touch any button, display screen and all light shot down.
- After display screen shot down into locked, M1/,M2,HOME can' t use anyway, you should touch up or down frist, it can be use when the display screen light.
- Installation method have 2 types, if you want to amount on the desktop, The size of the hole should cut at your left or right.

Ergo Zero Console Instruction

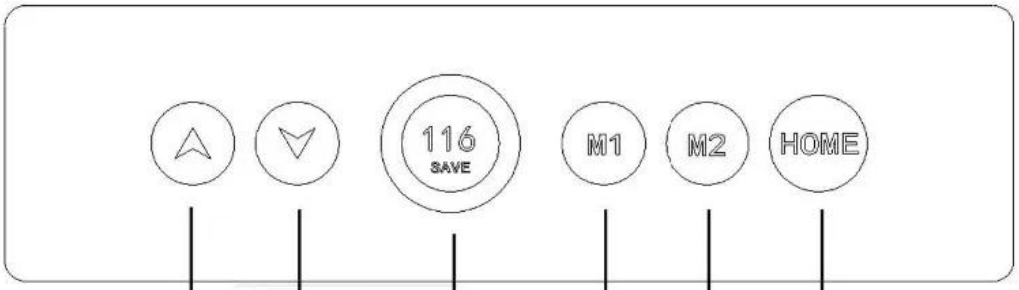

the height will go to 720mm(or 28.3 inchs)
Tuch the key and release it

the second memory position, press and hold
the key in 5 seconds for memory this position

the first memory position, press and hold
the key in 5 seconds for memory this position

display screen
display height 620-1170mm / can choose 24.4-50.0 inchs(without desktop)

Push and hold the keys down when arravied your position pls Release it

Push and hold the keys Rises when arravied your position pls Release it

Mode of operation

1. Lightly touch up/down button and hold the key to rise and low the desk height
2. Press HOME button quickly release to certain height 720mm(without desktop) to the normal desk height
3. M1,M2 press and hold the key in 5 seconds, and sounds "Bi" just memory this position.
   Press and quickly release will arrange your memory position.
4. 30S no touch any button, display screen and all light shot down.
5. After display screen shot down into locked, M1/,M2,HOME can' t use anyway, you should touch up or down frist, it can be use when the display screen light.
6. Installation method have 2 types, if you want to amount on the desktop, The size of the hole should cut at your left or right.

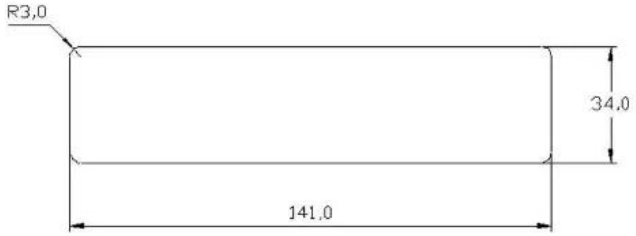

desktop amount type
the hole dimension

Gruppo di introduzione

Tuned eight with a socket head screw to the middle hole location as the reference point, need adjust the table frame length is standard, lock screw.

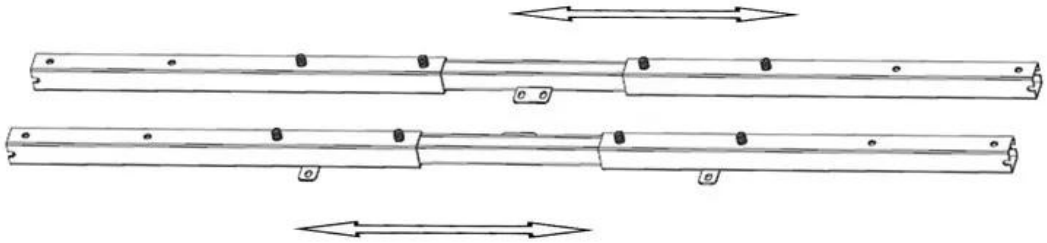

1. According to the demand of the panel adjust the frame length

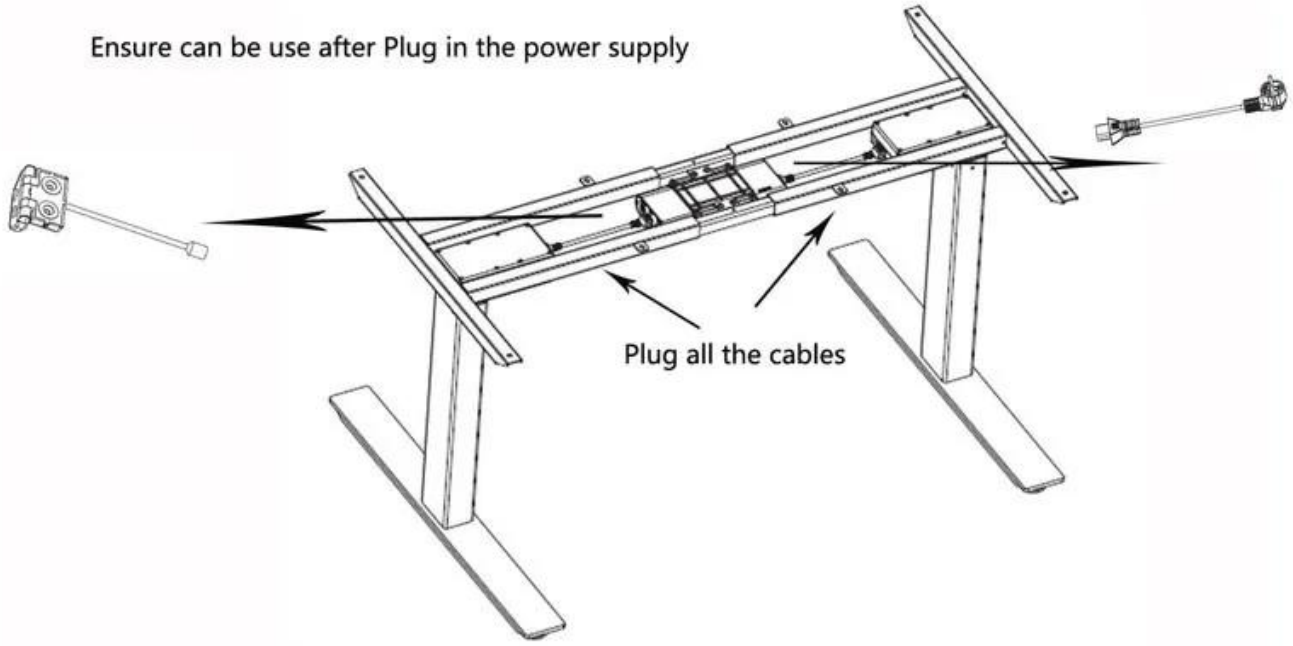

5 : Motor wires (2X) switch wire (1X) power supply wire (1X)

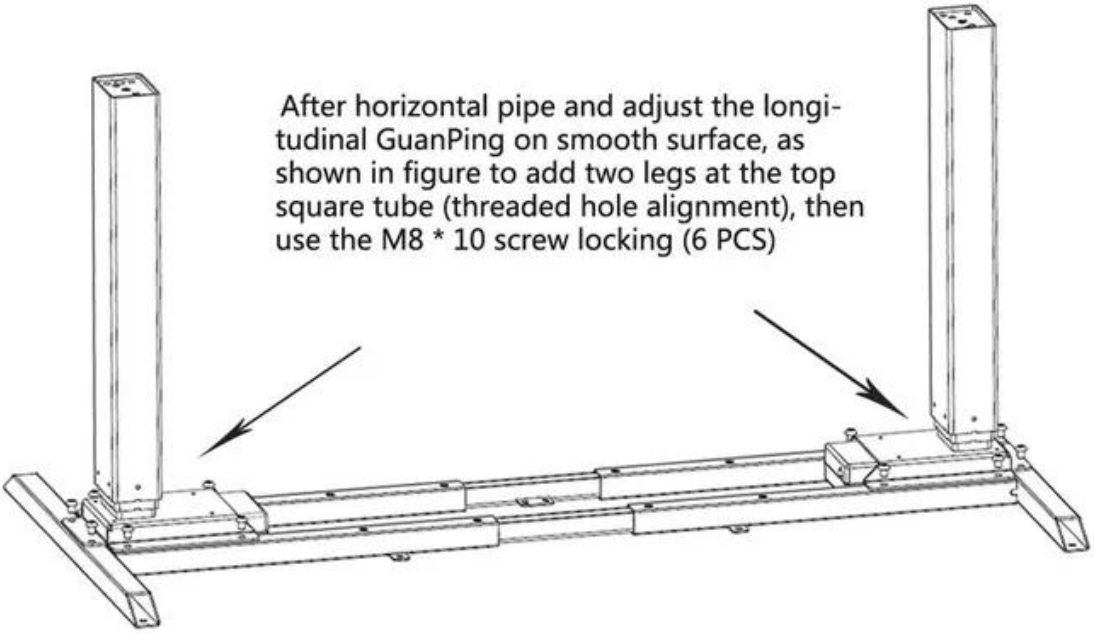

2.Install table legs (2 PCS) and horizontal tube (2 PCS)

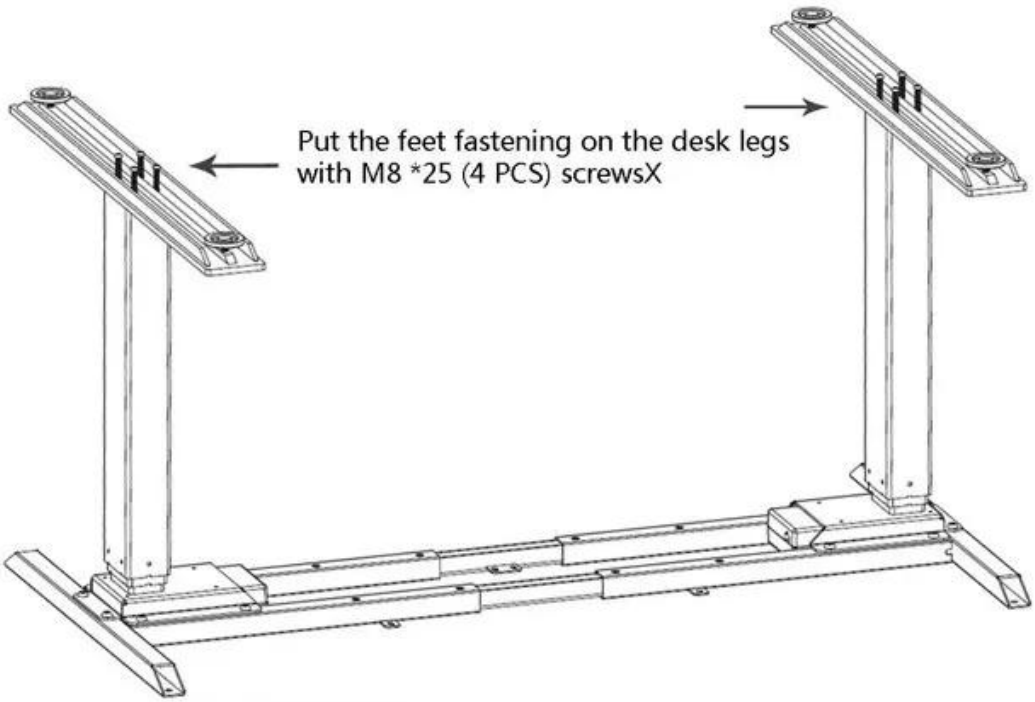

3 : Install desk feet(2pcs).

First of all, Installation controller fix with M6 * 10screws (4 PCS) , then put controller from one side inserted into the fixed block

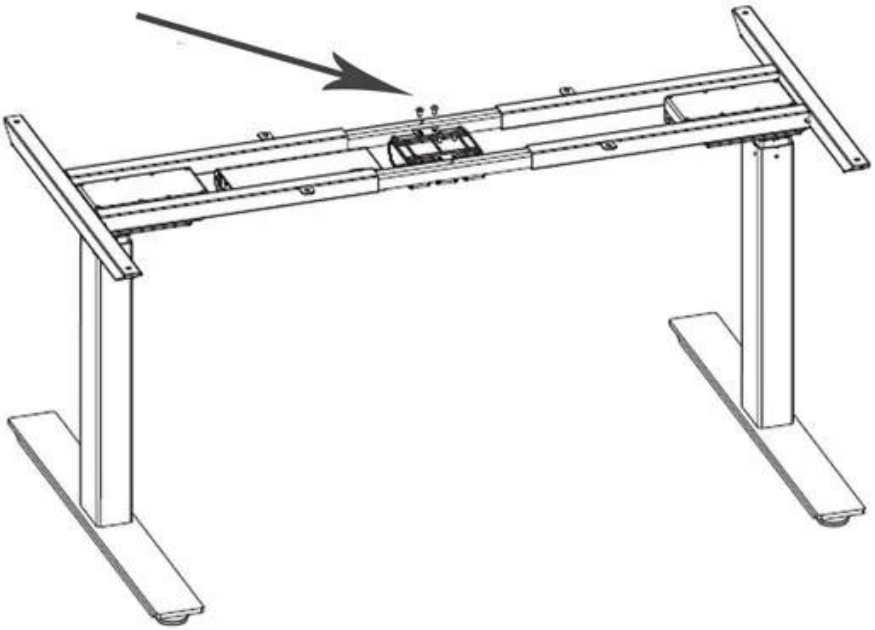

4 : Installation controller

Pacchetto di telaio del tavolo
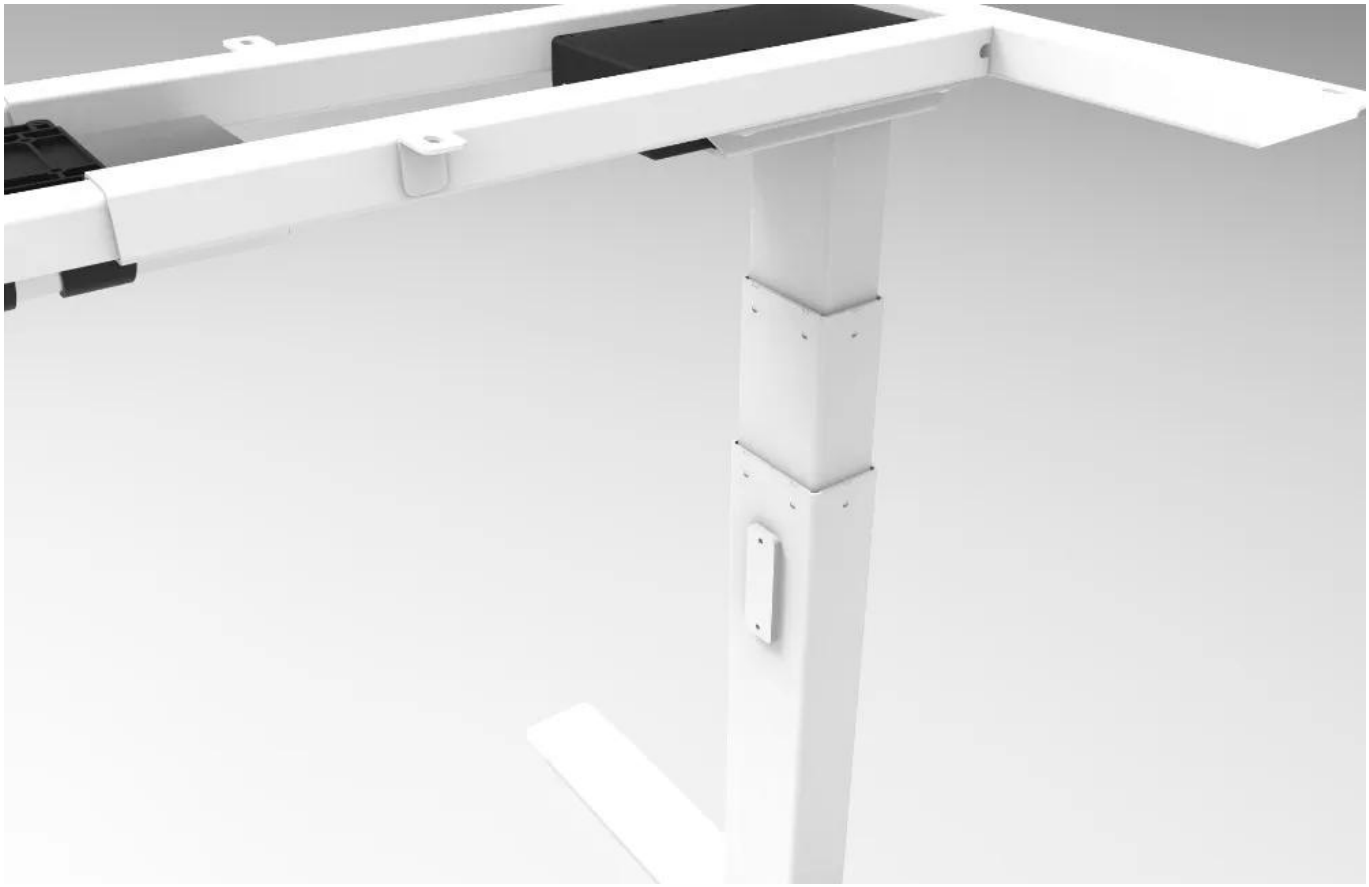
Più gambe sedere piedi Desk