Portable Removable Adjustable Laptop Desk/Stand/Table adjustable laptop stand for bed

Model Number	HDR-QD-MX260
Frame Material	Cold Rolled Steel/Q235
Height range	750-1155mm
legs size	700*460mm
Load capacity	8kg
Frame Color	Black、white、gray
Base height	80mm
Desktop material	MDF+PVC
Desktop size	690*480*18mm
Desktop color	black、white、wood grain
Gross weight	18KG
Packaging size	800*540*135mm
Leg configuration	2 universal locking PU pulley

Operating Manual

Attention:it is recommended not to exceed a maximum of 8KG on desk top to allow for easy lifting.

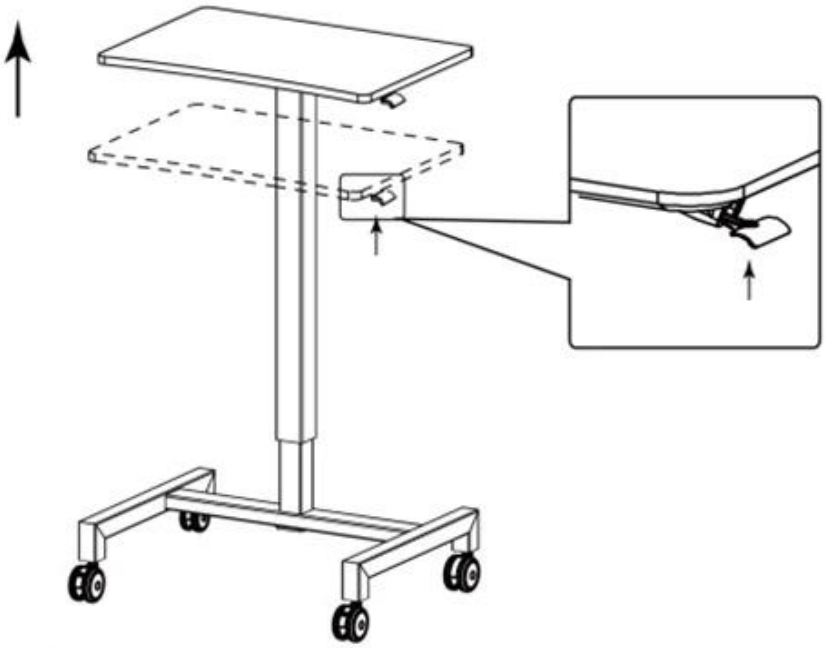

Lift the paddle for lifting the table top.

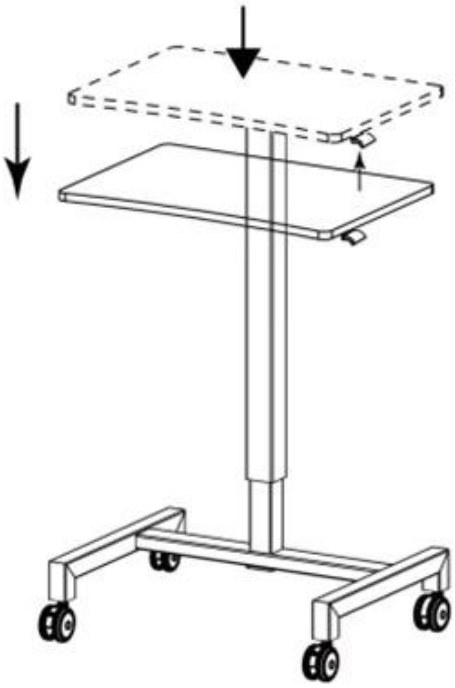

Lift the paddle and press the table top for downward operation.

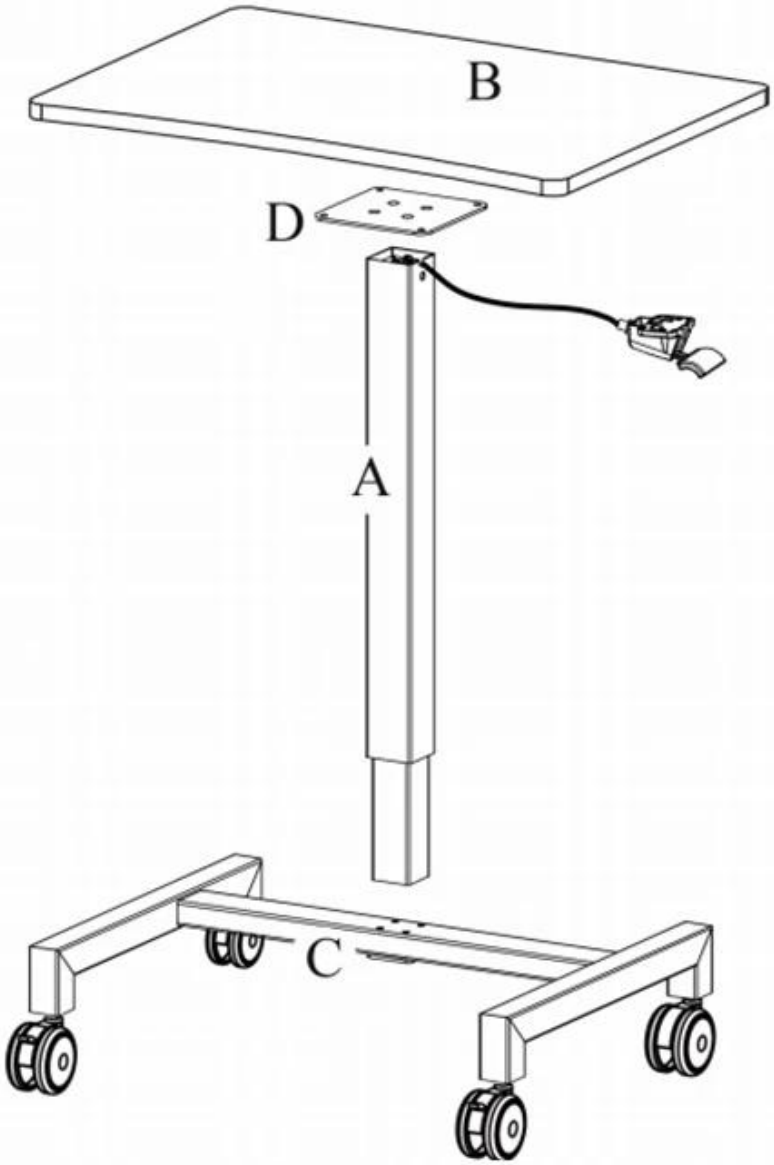

	Hx3			Kx1	10MM
	Ex5	M6x20mm		Fx5	M6X16mm
	Gx5	M6x60mm		Hx1	4MM
	Ix2	M6x10 mm		Jx1	12MM
	Lx2			Mx2	

1

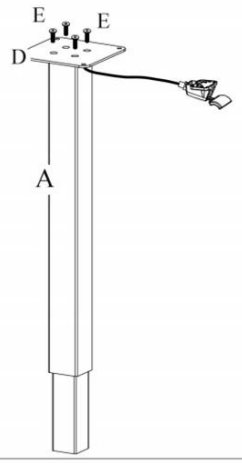

Kx1

Ex4 | Hx1

2

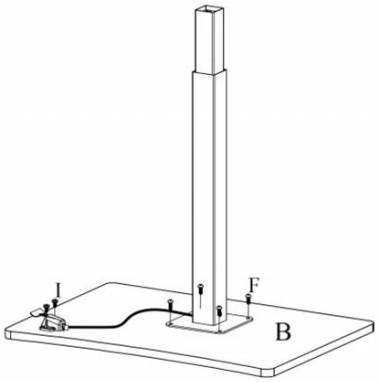

Fx4 | Hx1 | Ix2

3

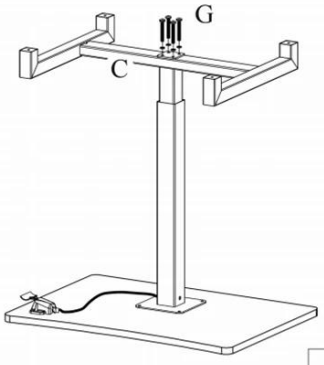

Gx4 | Hx1

4

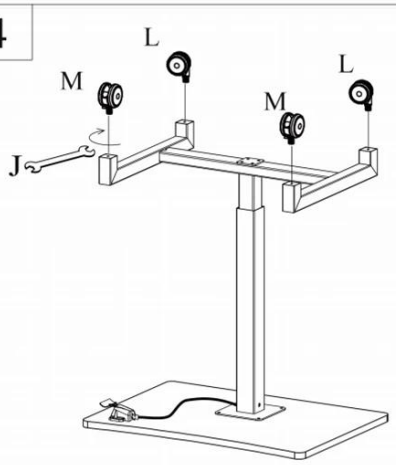

Mx2

Jx1 | Lx2

Packing and shipping

FAQ